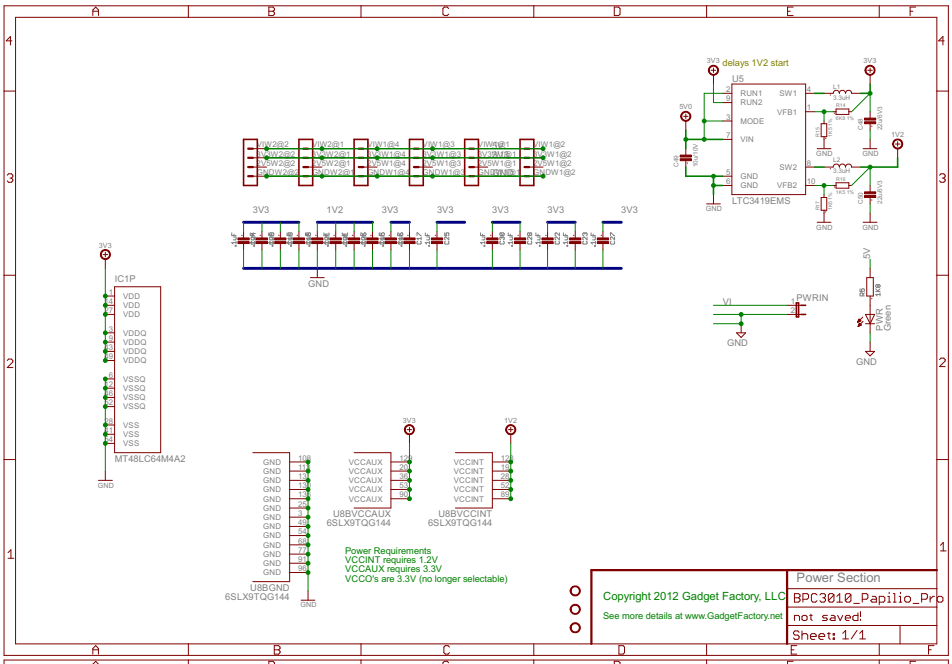
delays 1V2 start
LTC3419EMS
IC1P
MT48LC64M4A2
U8BVCCAUX
6SLX9TQG144
U8BVCCINT
6SLX9TQG144
U8BGND
6SLX9TQG144
Power Requirements
VCCINT requires 1.2V
VCCAUX requires 3.3V
VCCO's are 3.3V (no longer selectable)
PWRIN
Copyright 2012 Gadget Factory, LLC
See more details at www.GadgetFactory.net
Power Section
BPC3010_Papilio_Pro
not saved!
Sheet: 1/1

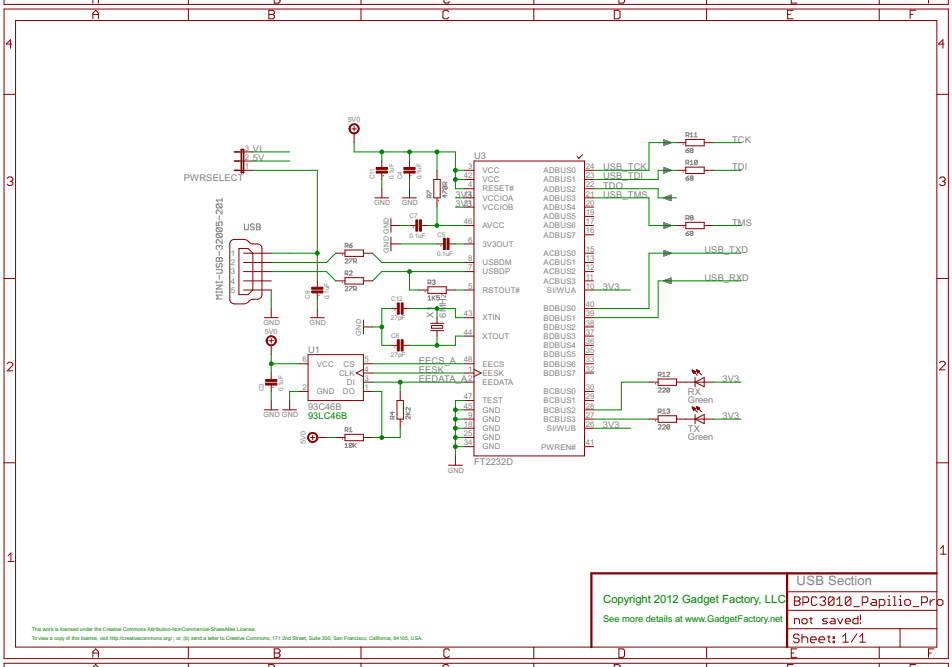
PWRSELECT
MINI-USB-32005-201
USB
93C46B
93LC46B
FT2232D
USB_TCK
USB_TDI
USB_TDO
USB_TMS
USB_TXD
USB_RXD
TCK
TDI
TMS
RX
Green
TX
Green
Copyright 2012 Gadget Factory, LLC
See more details at www.GadgetFactory.net
USB Section
BPC3010_Papilio_Pro
not saved!
Sheet: 1/1
This work is licensed under the Creative Commons Attribution-NonCommercial-ShareAlike License.
To view a copy of this license, visit http://creativecommons.org/; or, (b) send a letter to Creative Commons, 171 2nd Street, Suite 300, San Francisco, California, 94105, USA.

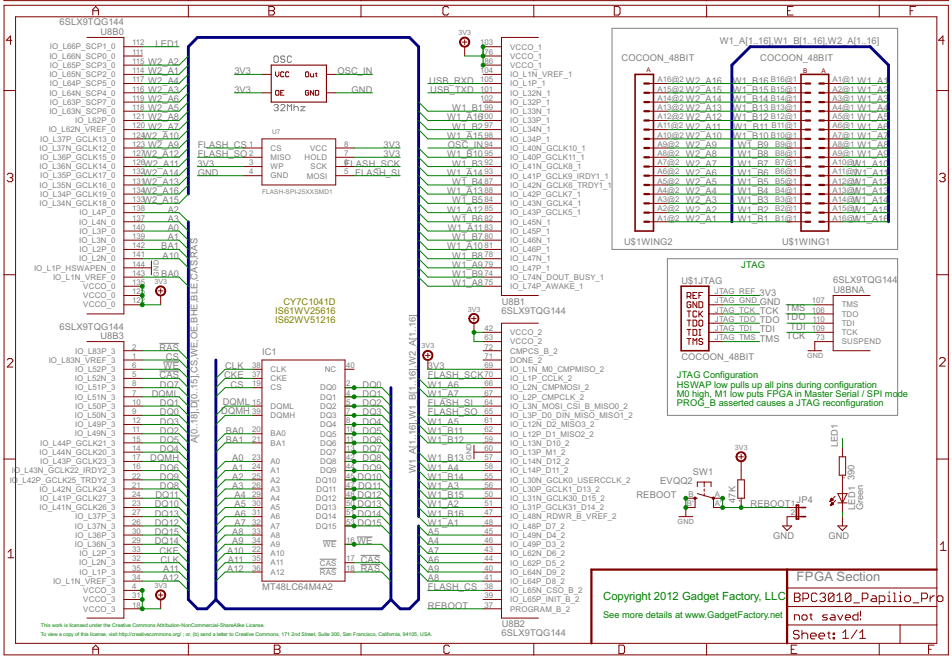
6SLX9TQG144
U8B0
U8B3
U8B1
U8B2
OSC
32Mhz
FLASH-SPI-25XX/SMD1
CY7C1041D
IS61WV25616
IS62WV51216
MT48LC64M4A2
COCOON_48BIT
U$1WING2
U$1WING1
U$1JTAG
JTAG
JTAG Configuration
HSWAP low pulls up all pins during configuration
M0 high, M1 low puts FPGA in Master Serial / SPI mode
PROG_B asserted causes a JTAG reconfiguration
REBOOT
Copyright 2012 Gadget Factory, LLC
See more details at www.GadgetFactory.net
FPGA Section
BPC3010_Papilio_Pro
not saved!
Sheet: 1/1
This work is licensed under the Creative Commons Attribution-NonCommercial-ShareAlike License.
To view a copy of this license, visit http://creativecommons.org/; or, (b) send a letter to Creative Commons, 171 2nd Street, Suite 300, San Francisco, California, 94105, USA.