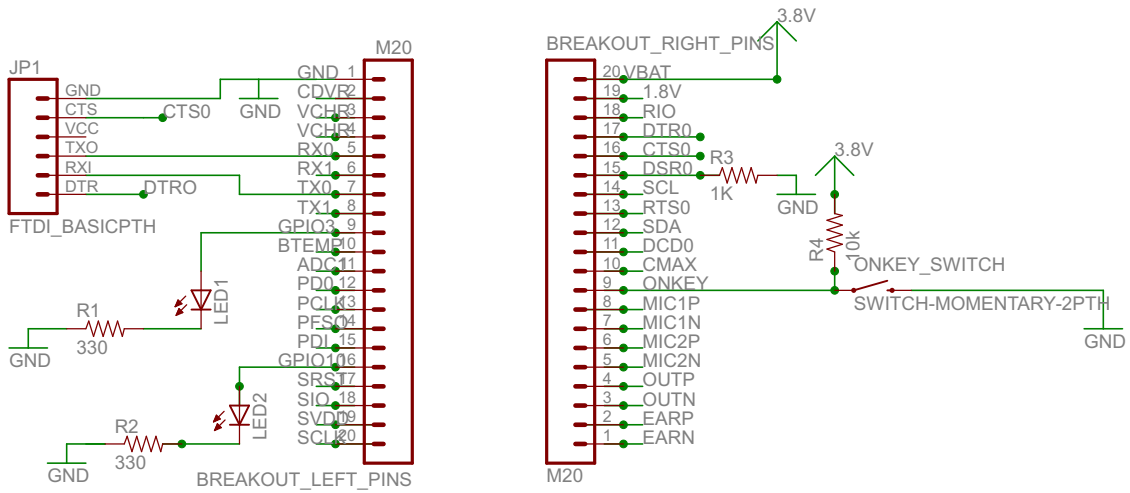

TITLE: ADH8066BreakoutBoardWiringCircuit	
Document Number:	REV:
Date: 2/15/2012 3:00:44 PM	Sheet: 1/1